CP772H Series
Impact Wrench

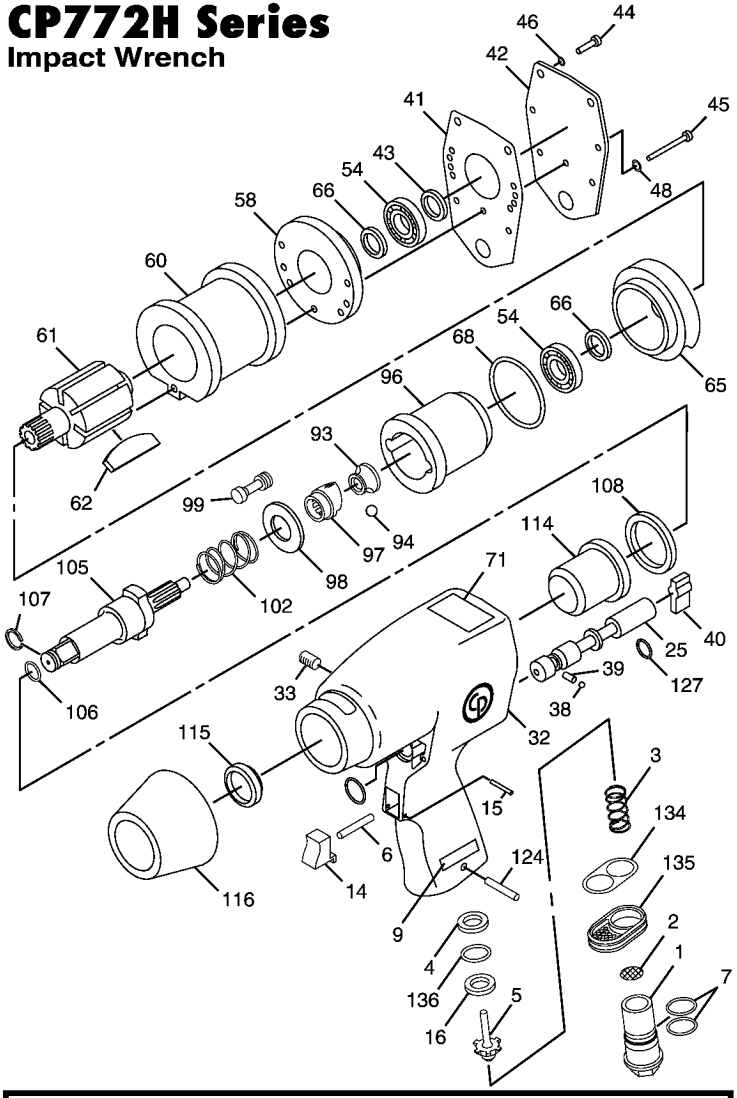

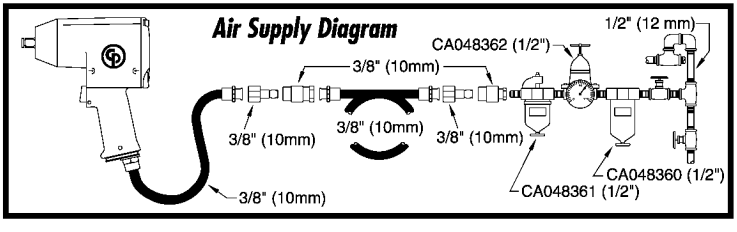

Index No.	Part No.	Description	No. Req'd.
1	CA148714	Bushing-Air Inlet	1
2	CA059037	Strainer-Air	1
3	CA142464	Spring-Throttle	1
4	CA149095	Spacer	1
5	CA142460	Valve-Throttle	1
6	CA144831	Pin-Throttle	1
7	C105693	O-Ring (-017)	2
9	CA131376	Decal-Oil Daily	1
14	CA147017	Trigger	1
15	CA144836	Pin-Roll (3/32)	1
16	C139037	Seat-Throttle	1
25	CA148723	Valve-Reverse	1
32	CA148713	Housing-Motor (Incl: Index Nos. 33, 114, 115)	1
33	S089953	Plug-Pipe (1/16 in. NPT)	1
38	S008613	Ball-Steel (.156 in. dia.)	1
39	CA147021	Spring-Detent	1
40	CA148709	Switch-Regulator	1
41	CA148711	Gasket	1
42	CA148708	Cover-Housing	1
43	C047451	O-Ring (-129)	1
44	C065376	Hd. Cap Screw	4
45	CA048436	Cap Screw	3
46	C012058	Lockwasher	4
48	CA156065	Washer-Spring	3
54	C068659	Bearing-Ball	2
58	CA048439	End Plate-Upper	1
60	CA148706	Liner	1
61	CA148722	Rotor	1
62	CA149753	Blade Set-Rotor (6)	1
65	CA048440	End Plate-Lower	1
66	C087936	Oil Seal	2
68	P083094	O-Ring (-230)	1
71	CA155779	Decal-Safety Warning	1
93	CA147931	Pilot-Cam Ball	1
94	CA048425	Ball-Steel (.406 in. dia.)	1
96	CA147932	Cage-Hammer	1
97	C117099	Cam-Hammer	1
98	CA115994	Yoke Hammer Cam	1
99	CA048418	Hammer Pin	2
102	CA048414	Spring	1
105	CA048423	Anvil-Shank (3/4 in. Sq. Dr.) (Incl: Index Nos. 106 & 107)	1
105A	CA053823	Shank-Anvil (3/4 in. Sq. Dr.)(Incl.: Index Nos. 106, 107)(6 in. longer)	1
106	CA083354	O-Ring (-111)	1
107	CA087404	Retainer-Socket	1
108	C117098	Spacer-Anvil	1
114	C117097	Bushing-Shank	1
115	S086549	Oil Seal	1
116	CA048467	Nose Shield	1
124	R086991	Pin-Roll .188 x 1.00	1
127	CA148710	O-Ring	1
134	CA148528	Gasket-Deflector Exh.	1
135	CA147023	Deflector-Exhaust	1

Tune-up Kit
CA149746 (Incl: Index Nos. 7, 41, 62, 66, 68, 106, 107, 115, 127)

Repair Kit
CA149747 (Incl: All Parts in Tune-Up Kit Plus Index Nos. 94, 99, 102, 105)