Chicago Pneumatic™

Hydraulic breakers
Brise-roche hydrauliques
Hydraulikhämmer
Rompedores hidráulicos
Martelos hidráulicos
Demolitori idraulici
Hydraulische breekhamers
Υδραυλικές κρουστικές
Hydraulivasarat
Hydrauliske mejselhamre
Hydrauliska hammere
Hydraulhammare

Spare parts list
Liste de pièces de rechange
Ersatzteilliste
Lista de piezas de repuesto
Lista de peças
Listino ricambi
Onderdelenlijst
Καταλοδος ανταλλακτικῶς
Varaosa luettelo
Reservdelsliste
Reservdelfortegnelse
Reservdelsförteckning

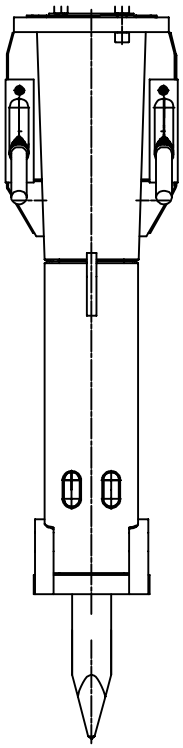

CP 1550

ASL
2004-11-29

© Copyright 2004

www.chicagopneumatic.com

No. 3390 7056 90

Main dimensions and weight CP 1550

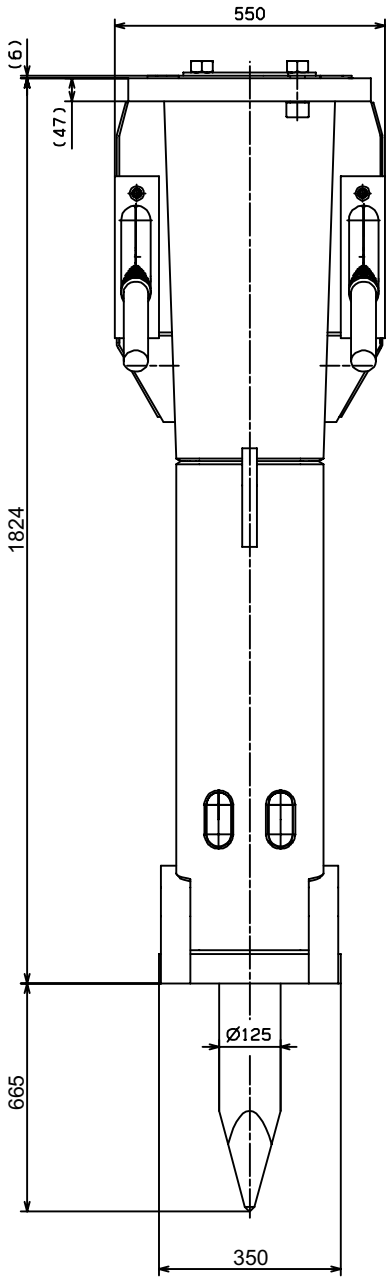

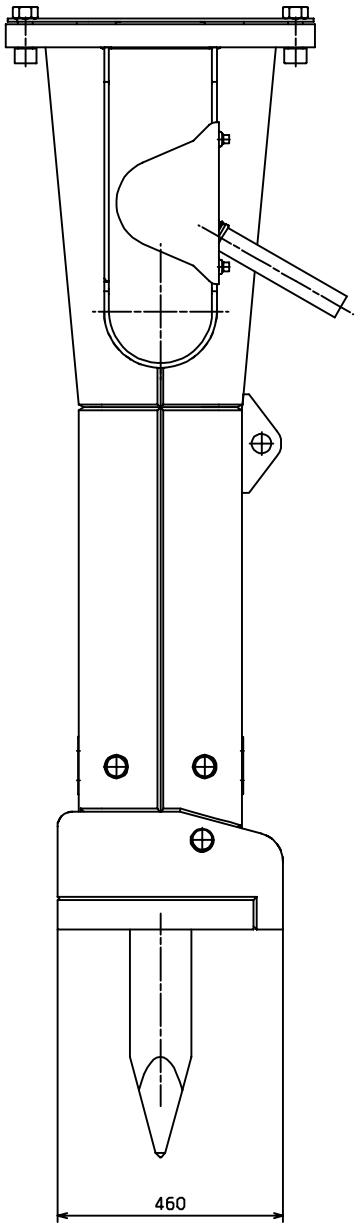

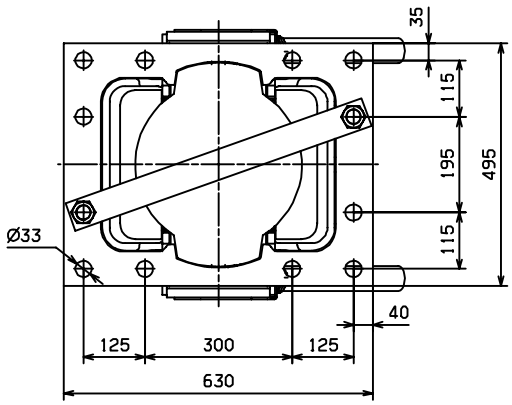

Weight: 1128 kg
(as shown, with hammer box, without chisel and without adapter)

Percussion unit CP 1550

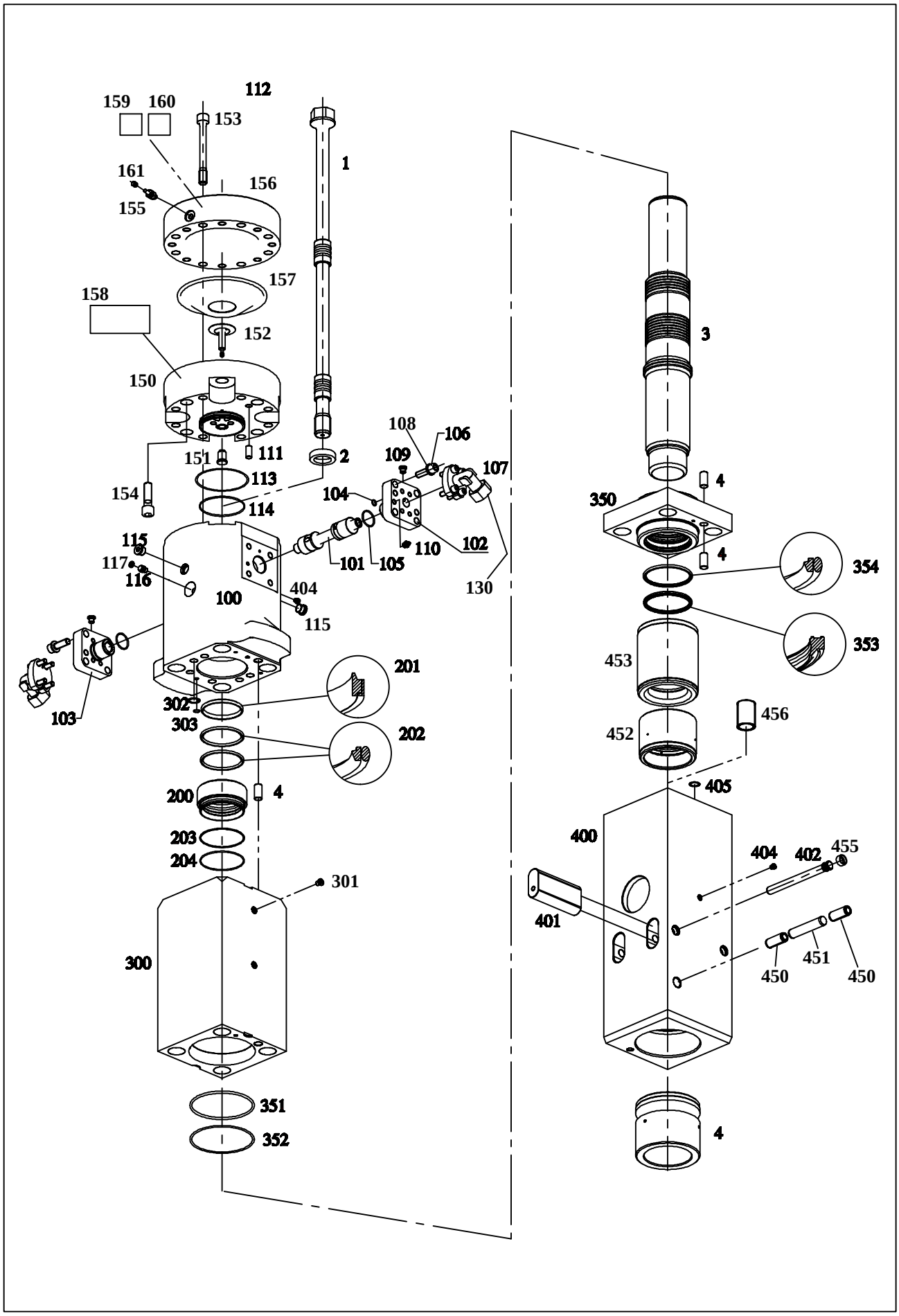

Spare parts list percussion unit CP 1550

Ref.	Model Decription	Qty.	CP 1550 Part no.
-	Percussion unit CP 1550	4	3363 0908 23
-	Side bolt with parts 1 and 2	4	3363 0913 20
1	Side bolt	4	3363 0901 77
2	Washer	4	3363 0906 99
3	Piston	1	3363 0912 74
4	Pin	3	3363 0899 29
100	Valve housing	1	3363 0912 75
101	Control valve	1	3363 0908 27
102	Flange (T)	1	3363 0908 19
103	Flange (P)	1	3363 0908 21
104 ★	O-ring	2	3363 0899 23
105 ★	O-ring	2	3363 0899 24
106	Screw	8	3360 0266 44
107	Fitting	2	3361 3290 56
108	Pair of locking rings	8	3361 3337 03
109	Threaded plug	2	3360 1078 81
110	Grease nipple	1	3363 0702 99
111	Pin	1	3363 0899 28
112	High pressure accumulator with parts 150-160	1	3363 0908 13
113 ★	O-ring	1	3363 0899 25
114 ★	O-ring	1	3363 0899 26
115	Threaded plug	2	3360 1078 85
-	Venting valve with parts 116 and 117	1	3363 0913 19
116	Venting valve	1	★★)
117 ★	Sealing	1	3363 0912 21
130 ★	O-ring	2	3360 0314 70
150	Diaphragm seat	1	★★)
151 ★	Plunger	1	3363 0908 41
152	Diaphragm support	1	3363 0908 43
153	Screw	8	3363 0908 37
154	Screw	8	3363 0908 39
155	Charge valve with part 161	1	3363 0912 12
156	Accumulator house	1	★★)
157 ★	Diaphragm	1	3363 0908 29
158	Data plate	1	★★)
159	Safety label	1	3363 0912 14
160	Safety label N_2	1	3363 0912 15
161	Valve cap	1	3363 0913 17

Parts marked with ★ will be subject to wear in the normal course of operations.

When ordering spare parts please do not forget to state the tool part. no.

★★) Not delivered separately/ Non disponible en pièces de rechange/ Nicht separat lieferbar/ No se entrega como repuesto/ Non fornible separatemente/Não é vendid/ Niet afzonderlijk leverbaar/ Δεν Παρέχεται ξεχωριστά/ Ei toimiteta erikseen/ Leveres ikke separat/ Leveres ikke som reservdel/ Levereras ej som reservdel

Percussion unit CP 1550

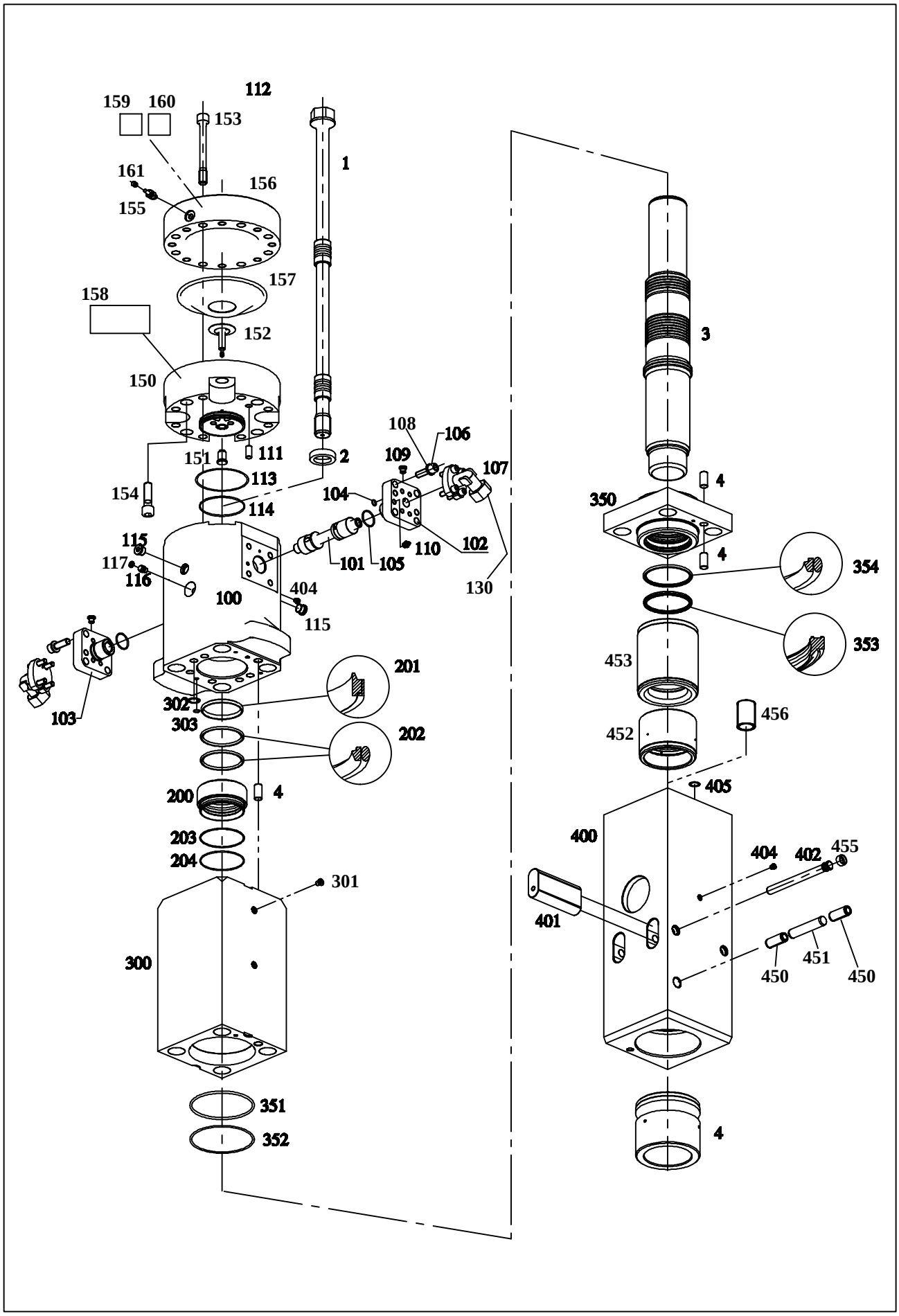

Spare parts list percussion unit CP 1550

Ref.	Model Decription	Qty.	CP 1550 Part no.
200	Sealing bush	1	3363 0908 33
201 ★	Stripper	1	3363 0899 73
202 ★	Sealing	2	3363 0899 72
203 ★	Back-up ring	1	3363 0899 74
204 ★	O-ring	1	3363 0899 71
300	Cylinder	1	3363 0912 76
301	Threaded plug	3	3360 1078 80
302 ★	O-ring	5	3363 0899 20
303 ★	O-ring	6	3363 0899 27
350	Sealing flange	1	3363 0912 77
351 ★	Back-up ring	1	3363 0899 75
352 ★	O-ring	1	3363 0899 21
353 ★	Stripper	1	3363 0899 69
354 ★	Sealing	1	3363 0899 70
400	Lower hammer part with parts 450-456	1	3363 0912 78
401 ★	Locking bar	2	3363 0908 25
402 ★	Bolt	2	3363 0330 27
404	Treaded plug	2	3360 1078 79
405 ★	O-ring	1	3363 0899 22
450 ★	Spring dowel sleeve	2	3363 0912 18
451 ★	Pin	1	3363 0912 19
452 ★	Wear bushing	1	3363 0908 03
453 ★	Impact ring	1	3363 0908 05
454 ★	Wear bushing	1	3363 0908 01
455 ★	Locking bush	2	3363 0330 43
456	Threaded insert	4	3363 0853 79

Parts marked with ★ will be subject to wear in the normal course of operations.

When ordering spare parts please do not forget to state the tool part. no.

★★) Not delivered separately/ Non disponible en pièces de rechange/ Nicht separat lieferbar/ No se entrega como repuesto/ Non fornible separatemente/Não é vendid/ Niet afzonderlijk leverbaar/ Δεν Παρέχεται ξεχωριστά/ Ei toimiteta erikseen/ Leveres ikke separat/ Leveres ikke som reservdel/ Levereras ej som reservdel

Hammer box CP 1550

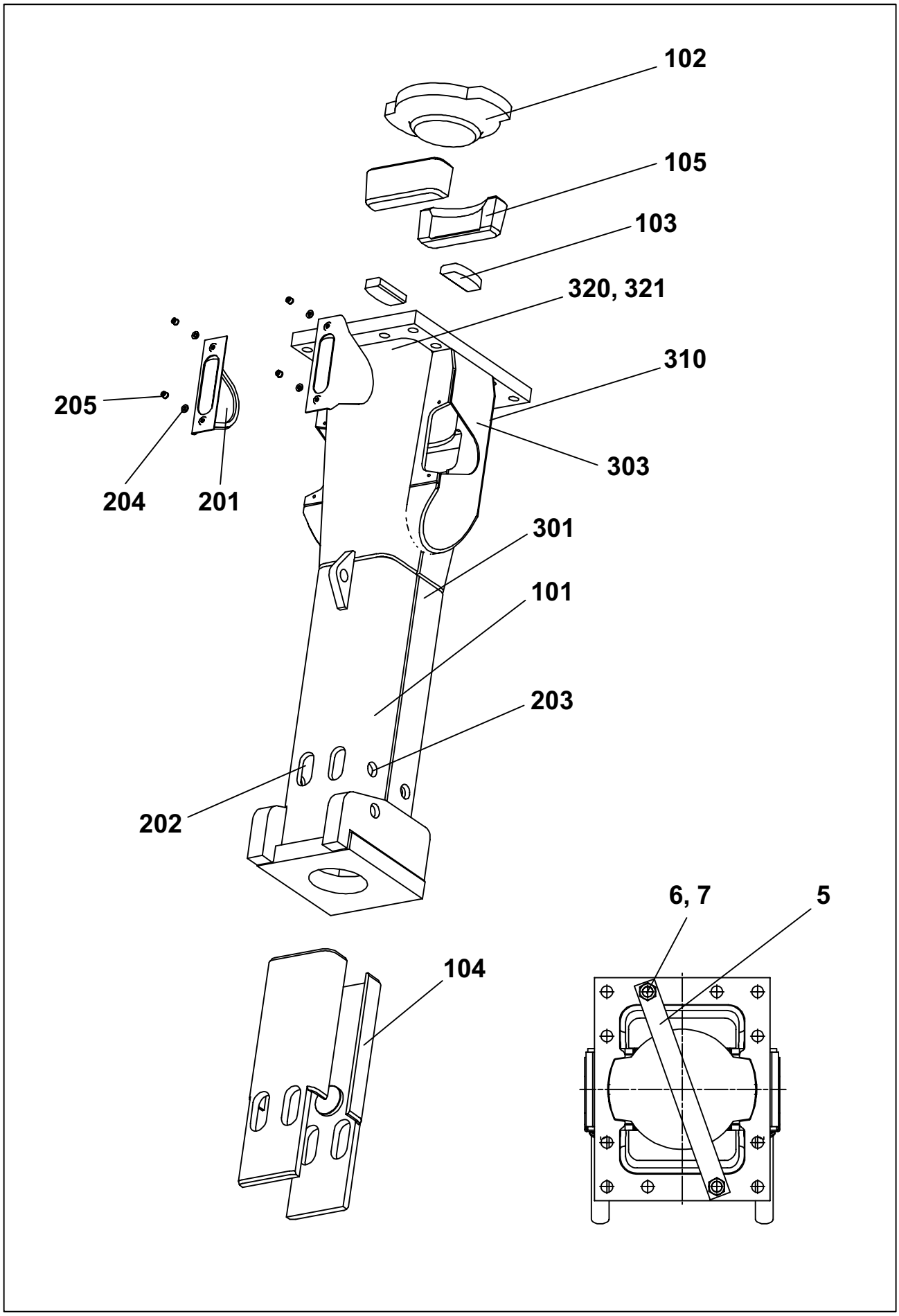

Spare parts list for hydraulic breaker CP 1550

Ref.	**Model** Decription	Qty.	**CP 1550** Part no.
5	Transport safety device	1	3362 2620 93
6	Screw	2	3360 0268 83
7	Nut	2	3360 1032 54
101	Breaker box	1	3363 0906 55
102 ★	Elastic pad	1	3363 0906 57
103 ★	Damping element	2	3363 0906 59
104 ★	Plate	2	3363 0906 61
105 ★	Plate	2	3363 0906 63
201 ★	Cover plate	2	3363 0906 65
202 ★	Plug	4	3363 0860 11
203 ★	Plug	6	3362 2678 97
204	Screw	4	3360 1007 91
205	Pair of locking rings	4	3361 8505 96
301	Sticker CP 1550	2	3363 0893 93
303	Sticker lubrication	1	3360 9954 11
310	Sticker noise level L_{WA}	1	3363 0899 59
320	CE name plate	1	3363 0893 95

Parts marked with ★ will be subject to wear in the normal course of operations.

When ordering spare parts please do not forget to state the tool part. no.

Connecting parts for manual lubrication for CP 1550

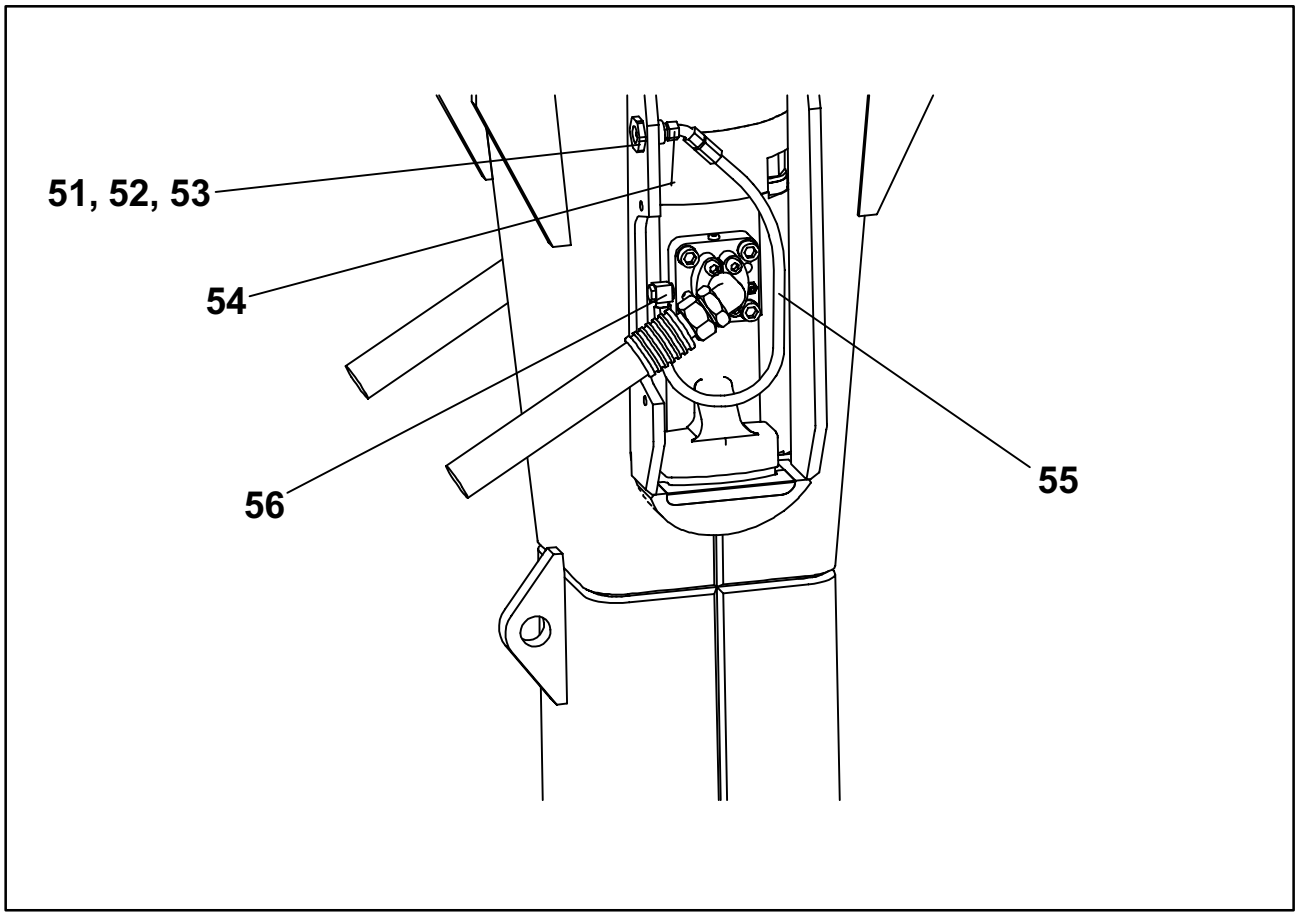

Spare parts list - connecting parts for manual lubrication

Ref.	Model Decription	Qty.	CP 1550 Part no.
-	Connecting kit for manual lubrication	1	3363 0913 50
51	Grease nipple	1	3360 4337 74
52	Adapter	1	3362 2698 57
53	Nut	1	3362 3281 38
54	Fitting	1	3360 2047 48
55 ★	Hose	1	3363 0903 66
56	Fitting	1	3363 0662 33

Parts marked with ★ will be subject to wear in the normal course of operations.

When ordering spare parts please do not forget to state the tool part. no.

CP 1550

Accumulator repair kit/ Kit de réparation pour accumulateur/ Akkumulator - Reparatursatz/ Juego de reparación del accumulador/ Jogo do reparação ou acumulador/ “Kit” per riparazione accumulatore/ Akkumulator - herstel kit/ Σετ επισκευής συσσωρευτή/ Paineakun korjaustarvikkeet/ Akkumulatorreparationssæt/ Reparasjonssett for akkumulator/ Accumulator, reparations sats

Ref.	**Model** Decription	Qty.	**CP 1550** Part no.
	Accumulator repair kit compl.	1	3363 0913 21
113 ★	-O-ring	1	3363 0899 25
114 ★	-O-ring	1	3363 0899 26
151 ★	-Plunger	1	3363 0908 41
152	-Diaphragm support	1	3363 0908 43
155	-Charge valve, compl.	1	3363 0912 12
157 ★	-Diaphragm	1	3363 0908 29

Seal set/ Jeu de joint d’etanchéité/ Dichtungssatz/ Juego de sellado/ Jogo de vedantes/ Gruppo di tenuta/ Dichtingsset/ Σετ στεγανωτικού/ Tiivistesarja/ Pakningssæt/ Pakningssett/ Tätningssats

Ref.	**Model** Decription	Qty.	**CP 1550** Part no.
★	Seal set, compl.	1	3363 0912 79

Parts marked with ★ will be subject to wear in the normal course of operations.

When ordering spare parts please do not forget to state the tool part. no.

Note:
When a hammer box assembly is ordered, a loose CE nameplate is included in the consignment in accordance with European CE legislation. The weight stated on the adhesive nameplate refers to the weight of the hydraulic breaker plus hammer box (not including connector and tool).
After the hydraulic breaker and the hammer box have been assembled the CE nameplate should be attached to front of the hammer box (see operating manual). Only then may the complete unit be used.

Tightening torques CP 1550

Ref. no.	**Designation**		**size . . NM**
1	Side bolt	1” step	SW 55 / 500 Nm
		2” step	120°
		3” step	90°
106	Screw		SW 14 / 130 Nm
115	Treaded plug		SW 10 / 100 Nm Loctite 242
153	Screw		SW 17 / 260 Nm
154	Srew		SW 17 / 370 Nm
155	Charge valve		SW 19 / 30 Nm
301	Threaded plug		SW 6 / 40 Nm Loctite 242
404	Treaded plug		SW 5 / 20 Nm Loctite 242
-	Adapter (Cylindrical bolt)		SW 22 / 1500 Nm

Working tools CP 1550

Pos.	Part no	Description	Total length mm	Working length mm	Weight kg
1	3083 3158 01	Moil point	1200	665	103
2	3083 3159 01	Narrow chisel	1200	665	107
3	3083 3160 01	Blunt tool	1200	665	113

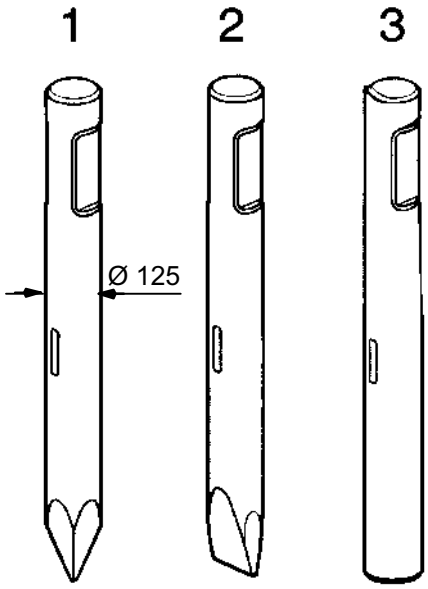

Use only authorized parts. Any damage or malfunction caused by the use of unauthorized parts is not covered by Warranty or Product Liability.

N'utiliser que des pièces approuvées. Tout endommagement ou fonctionnement défectueux résultant de l'utilisation de pièces non approuvées n'est pas couvert par Garantie et responsabilité du produit.

Nur zugelassene Teile verwenden. Schäden oder Funktionsstörungen, die auf die Verwendung nicht zugelassener Teile zurückzuführen sind, fallen nicht unter die Garantie- oder Produkthaftungsbestimmungen.

Sólo se pueden usar piezas autorizadas. Cualquier daño o funcionamiento defectuoso causado por el uso de piezas no autorizadas no se cubre por la Garantía o la Responsabilidad del Producto.

Use apenas peças autorizadas. Qualquer avaria ou mau funcionamento motivado pelo uso de peças não é coberto por garantia ou responsabilidade de riscos causados pelo produto.

Usare solamente parti autorizzate. I danni o disturbi del funzionamento causati dall'uso di parti non autorizzate, non sono coperti dalla Garanzia né dall'Assicurazione del prodotto.

Gebruik uitsluitend geautoriseerde onderdelen. Schade of gebreken veroorzaakt door het gebruik van niet-geautoriseerde onderdelen vallen niet onder de garantie of de produkt-aansprakelijkheid.

Χρησιμοποιείτε μόνο εγκεκριμένα εξαρτήματα. Τυχόν καταστροφή ή βλάβη η οποία προκαλείται από τη χρήση μη εγκεκριμένων εξαρτημάτων δεν καλύπτονται από τους κανονισμούς της εγγύησης ή της ευθύνης του κατασκευαστή.

Käytä vain hyväksyttyjä varaosia. Takuu ja tuotevastuu eivät korvaa hyväksymättömien varaosien käytöstä aiheutuvia vaurioita tai toimintahäiriöitä.

Brug kun autoriserede dele. Enhver skade eller fejlfunktion, der skyldes brugen af ikke-autoriserede dele, er ikke dækket af garantien eller produktansvarsforsikringen.

Bruk bare godkjente deler. Enhver skade eller funksjonsfeil som skyldes bruk av ikke godkjente deler dekkes ikke av garanti eller produktansvar.

Använd endast godkända reservdelar. Skada eller funktionsfel som beror på användning av ej godkända reservdelar täcks inte av garantiåtaganden eller produktansvar.

Any unauthorized use or copying of the contents or any part thereof is prohibited. This applies in particular to trademarks, model denominations, part numbers and drawings.

Toute utilisation ou reproduction non autorisée du contenu, ou d'une partie du contenu, est illicite. Cela s'applique particulièrement aux marques déposées, aux désignations de modèles, aux numéros de pièces et aux plans.

Unbefugter Gebrauch oder das Kopieren des Inhalts, auch auszugsweise, ist verboten. Dies gilt besonders für Warenzeichen, Modellbezeichnungen, Teilnummern und Zeichnungen.

Está prohibido cualquier uso o copia no autorizada del contenido o de cualquier parte de éste. Esto se aplica en especial a marcas registradas, denominaciones de modelos, números de piezas y dibujos.

Qualquer utilização não autorizada ou cópia de qualquer peça é expressamente proibida. Isto alica-se em particular ás marcas registadas, denominação dos modelos, referência de peças e desenhos.

E' vitata qualsiasi forma d'uso o copiatura non autorizzata del contenuto, anche parziale, con particolare riguardo ai marchi di fabbrica, alle denominazioni dei modelli, ai numeri delle parti ed ai disegni.

Niet-geautoriseerd gebruik of kopiëren van de inhoud of een deel daarvan is niet toegestaan. Dat geldt in het bijzonder voor handelsmerken, model-benamingen, onderdeel nummers en tekeningen.

Απαγορεύεται η χρησιμοποίηση από αναρμόδιους καθώς και η αντιγραφή του περιεχομένου κειμένου ή τμήματος αυτού. Αυτό ισχύει ιδιαίτερα για τα κατατεθέντα σήματα, τις ονομασίες μοντέλων, τους αριθμούς εξαρτημάτων και τα σχέδια.

Sisällön tai sen osan luvaton käyttö tai kopiointi on kielletty. Tämä koskee erityisesti tavaramerkkejä, mallien nimiä, osanumeroita ja piirustuksia.

Enhver ikke-autoriseret brug eller kopiering af indholdet eller nogen del deraf er forbudt. Dette gælder især varemærker, modelbetegnelser, reservedelsnumre og tegninger.

Enhver ikke godkjent bruk eller kopiering av innholdet eller noen del av det er forbudt. Dette gjelder i særlig grad varemerker, modellbetegnelser, delnummer og tegninger.

Ej i förväg godkänd användning eller kopiering av innehållet eller del av detta är förbjuden. Detta gäller speciellt varumärken, modellbeteckningar, reservdelsnummer och ritningar.

Niet-geautoriseerd gebruik of kopiëren van de inhoud of een deel daarvan is niet toegestaan. Dat geldt in het bijzonder voor handelsmerken, model-benamingen, onderdeel nummers en tekeningen.

Απαγορεύεται η χρησιμοποίηση από αναρμόδιους καθώς και η αντιγραφή του περιεχομένου κειμένου ή τμήματος αυτού. Αυτό ισχύει ιδιαίτερα για τα κατατεθέντα σήματα, τις ονομασίες μοντέλων, τους αριθμούς εξαρτημάτων και τα σχέδια.

Sisällön tai sen osan luvaton käyttö tai kopiointi on kielletty. Tämä koskee erityisesti tavaramerkkejä, mallien nimiä, osanumeroita ja piirustuksia.

Enhver ikke-autoriseret brug eller kopiering af indholdet eller nogen del deraf er forbudt. Dette gælder især varemærker, modelbetegnelser, reservedelsnumre og tegninger.

Enhver ikke godkjent bruk eller kopiering av innholdet eller noen del av det er forbudt. Dette gjelder i særlig grad varemerker, modellbetegnelser, delnummer og tegninger.

Ej i förväg godkänd användning eller kopiering av innehållet eller del av detta är förbjuden. Detta gäller speciellt varumärken, modellbeteckningar, reservdelsnummer och ritningar.

Notes: