Chicago Pneumatic™

Spare parts list
Liste de pièces de rechange
Ersatzteilliste
Lista de piezas de repuesto
Lista de peças
Listino ricambi
Onderdelenlijst
Καταλοδος ανταλλακτικῶς
Varaosa luettelo
Reservdelsliste
Reservdelfortegnelse
Reservdelsförteckning

Hydraulic breakers
Brise-roche hydrauliques
Hydraulikhämmer
Rompedores hidráulicos
Martelos hidráulicos
Demolitori idraulici
Hydraulische breekhamers
Υδραυλικές κρουστικές
Hydraulivasarat
Hydrauliske mejselhamre
Hydrauliska hammere
Hydraulhammare

CP 1150

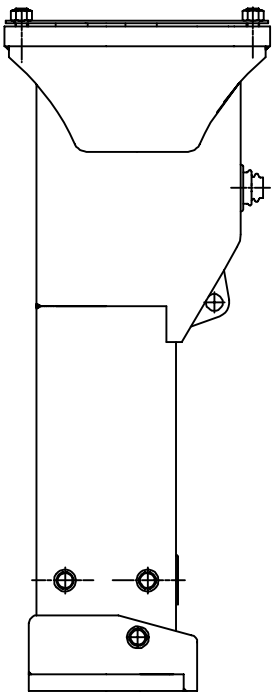

ASL
2004-07

© Copyright 2004

www.chicagopneumatic.com

No. 3390 7016 90

Dimensions and weights CP 1150

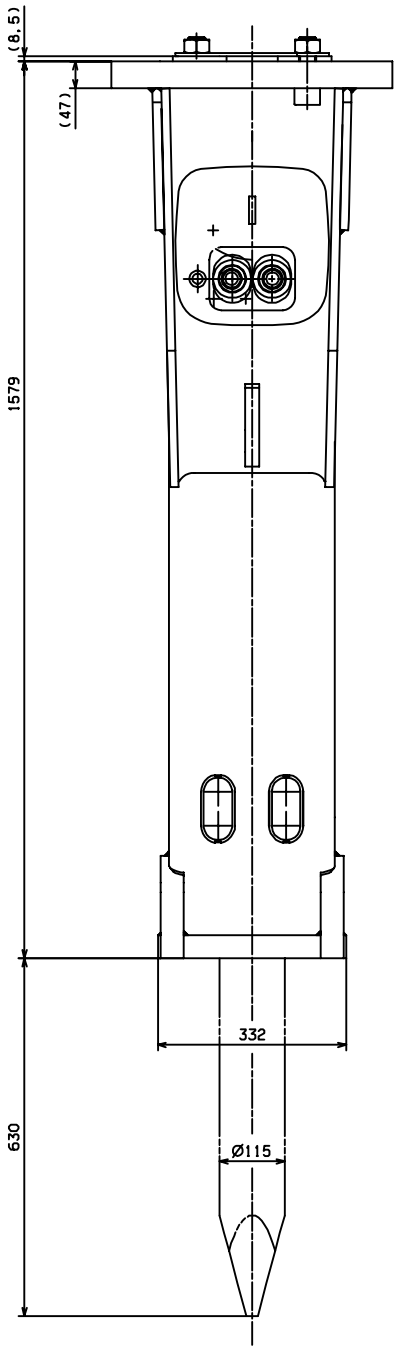

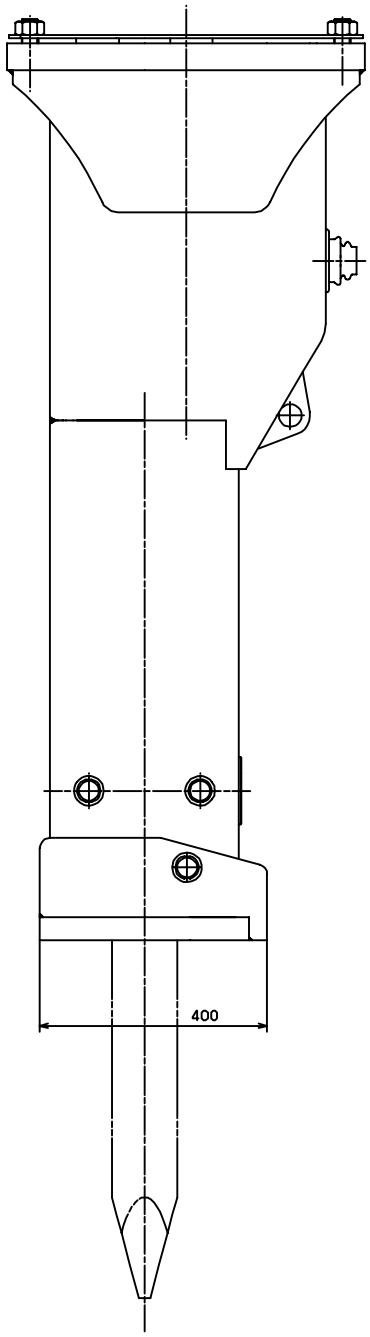

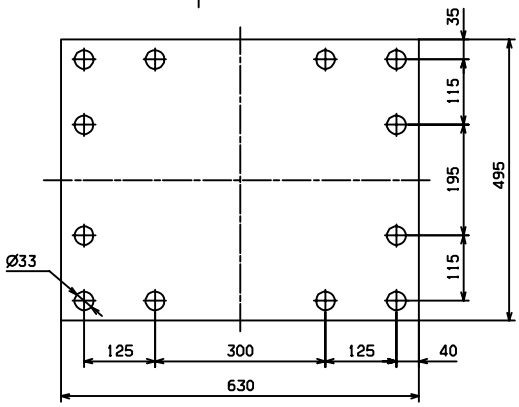

Weight: . . . . . 974 kg
(as shown, without chisel and adapter)

Percussion unit CP 1150

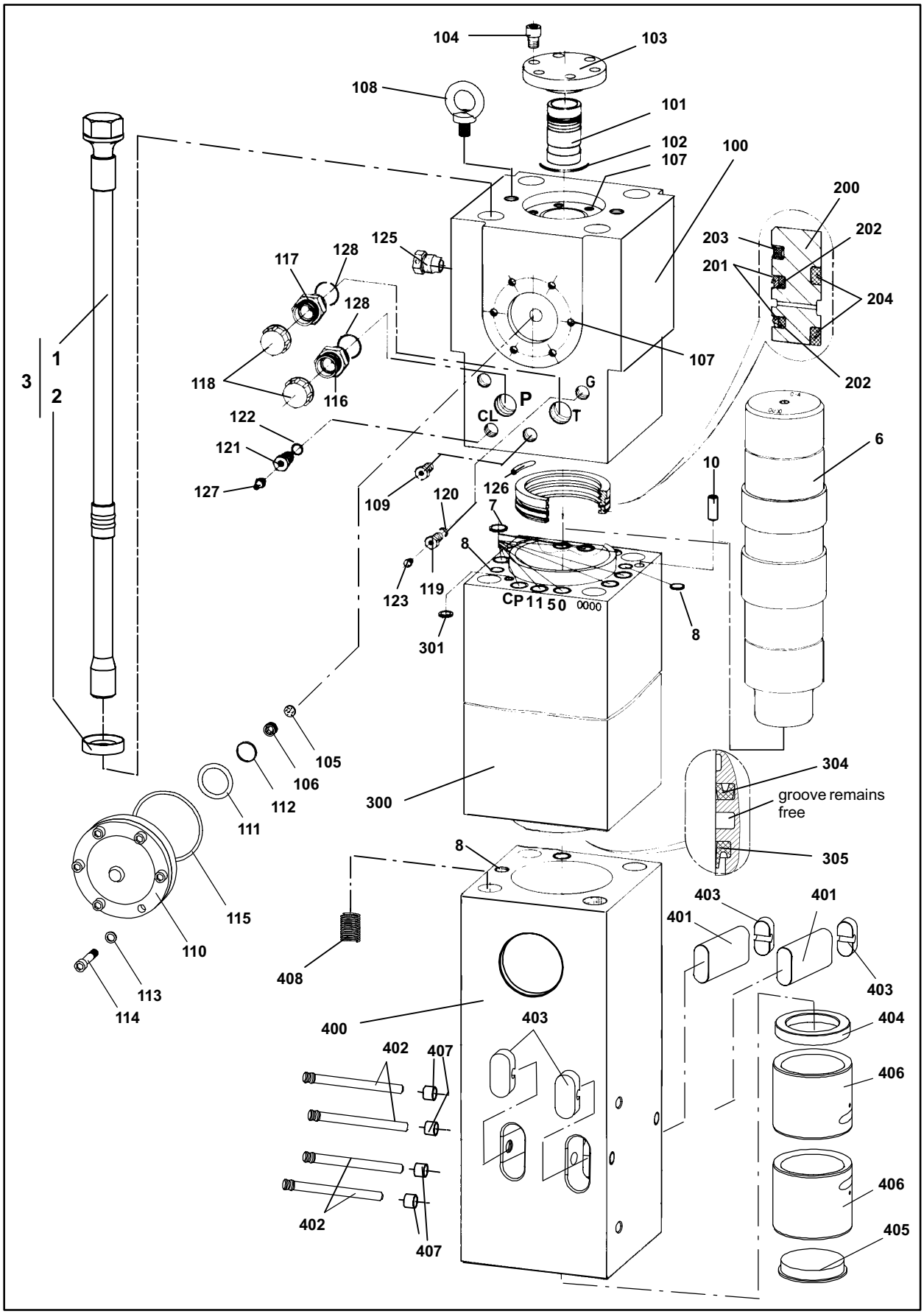

Spare parts list for percussion unit CP 1150

Ref.	Model Decription	Qty	CP 1150 part no.
1	Tensioning bolt	4	3363 0887 03
2	Washer	4	3363 0671 87
3	Tensioning bolt with parts 1 and 2	4	3363 0879 08
6	Percussion piston	1	3361 3542 47
7★	Seal	11	3362 2675 87
8★	Seal	3	3362 2675 85
10 ★	Dowel pin	1	3360 9211 79
100	Cylinder cover with parts 105, 106, 107 and 109	1	3363 0894 84
101	Control slide valve	1	3360 9236 59
102 ★	O-ring	1	3360 3144 56
103	Cover	1	3362 2619 50
104	Hexagonal socket head screw	1	3360 1037 66
105	Sieve disk	1	3361 8441 13
106	Threaded plug	1	3361 8441 15
107	Threaded insert	12	3361 0319 15
108	Eye bolt	2	3360 2065 98
109	Screw plug	1	3363 0669 63
110	Pressure accumulator	1	3363 0695 85
111 ★	O-ring	1	3361 0319 12
112 ★	Back-up ring	1	3361 8505 29
113	Lock washer	6	3361 3337 03
114	Hexagonal socket head screw	6	3363 0344 81
115 ★	O-ring	1	3361 0319 90
116	Male screw connection	1	3360 9956 65
117	Male screw connection, orifice diam. 11,5	1	3362 2627 15
118	Screw cap	2	3361 3534 88
119	Filling valve with parts 120 and 123	1	3363 0872 86
120 ★	O-ring	1	3360 1751 25

Ref.	Model Decription	Qty	CP 1150 part no.
121	Connection screw	1	3361 8546 57
122 ★	O-ring	1	3360 4781 71
123	Threaded plug	1	3360 4784 26
125	Nom-return valve	1	3361 8545 11
126 ★	O-ring	1	3360 4788 85
127	Lubrication nipple	1	3360 4337 74
128 ★	O-ring	1	3360 3145 51
200	Seal bush	1	3360 9236 77
201 ★	Seal	2	3360 9209 30
202 ★	O-ring	2	3360 9209 32
203 ★	Seal	1	3360 9209 35
204 ★	O-ring	2	3360 4786 04
300	Cylinder	1	3363 0894 83
301 ★	Seal	1	3362 2675 82
304 ★	Seal	1	3363 0340 03
305 ★	Stripper	1	3363 0666 61
400	Lower hammer part with parts 401, 2 x 402, 403 - 408	1	3363 0894 82
401 ★	Retaining bar	2	3360 9930 29
402 ★	Locking pin	4	3362 2618 50
403 ★	Sealing plug	4	3362 2629 25
404 ★	Buffer ring	1	3363 0690 73
405	Dust cap	1	3360 9953 38
406 ★	Wear bush	2	3363 0901 03
407 ★	Locking bush	4	3361 8543 63
408 ★	Treaded insert	4	3363 0317 74

Parts marked with ★ will be subject to wear in the normal course of operations.

When ordering spare parts please do not forget to state the tool part. no.

Hydraulic hammer CP 1150

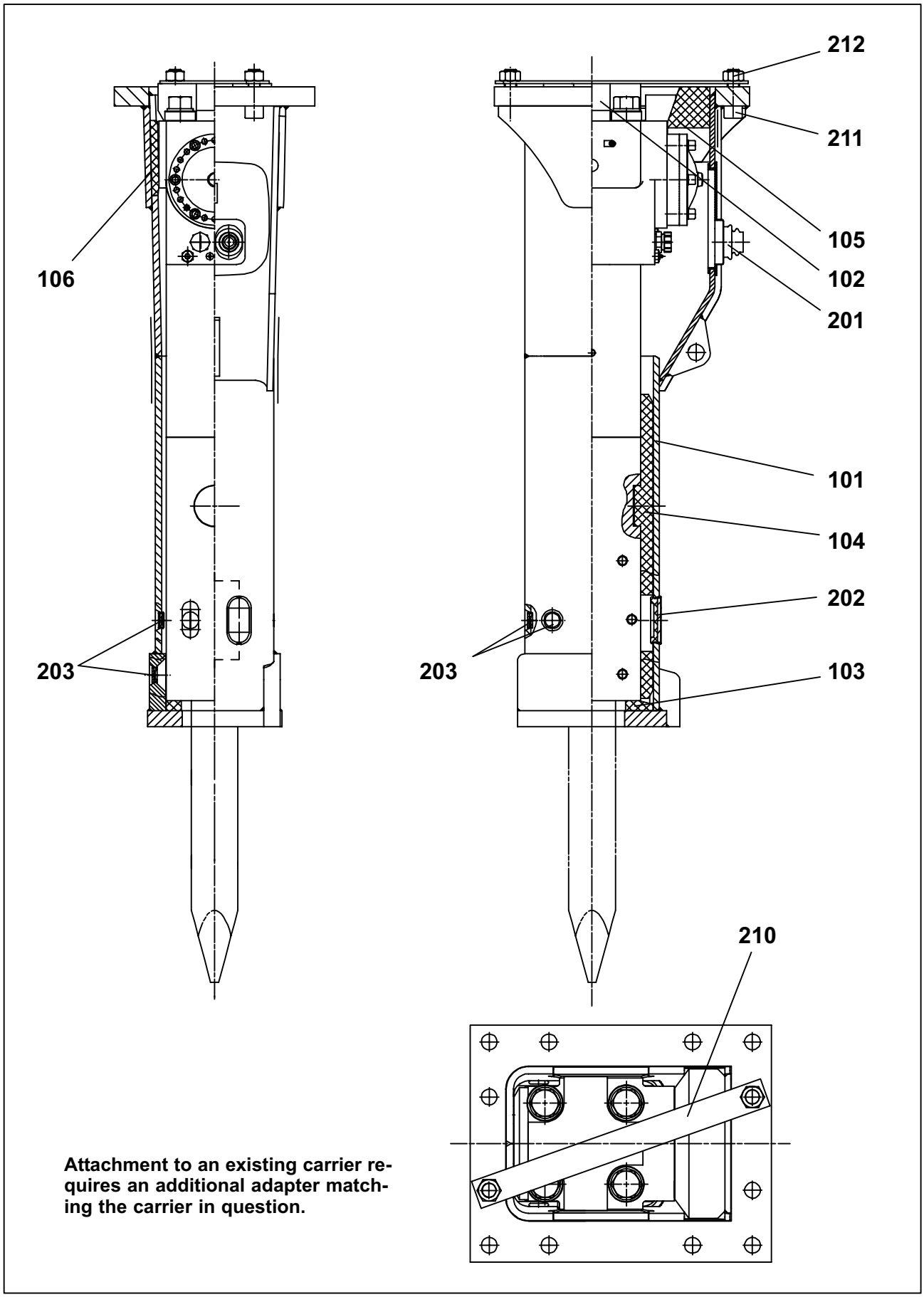

Attachment to an existing carrier requires an additional adapter matching the carrier in question.

Spare parts list for hydraulic breaker CP 1150

Ref.	**Model** Description	Qty.	**CP 1150** part no.
101	Hammer box	1	3363 0903 75
102 ★	Elastic pad	1	3363 0901 65
103 ★	Shock absorber	1	3363 0901 67
104 ★	Guide plate	2	3363 0901 63
105 ★	Stopper	1	3363 0903 35
106 ★	Stopper	2	3363 0903 33
201 ★	Cover	1	3362 2679 04
202 ★	Plug	2	3363 0860 11
203 ★	Plug	8	3362 2678 97
210	Transport safety device	1	3362 2620 93
211	Cylindrical bolt	2	3360 0268 83
212	Hexagonal nut	2	3360 1032 54

Seal set/ Jeu de joints d'etanchéité/ Dichtungssats/ Juego de sellado/ Gruppo di tenuda/Jogo de vedantes Dichtingsset/ Σετ δτεγανωτικού/ Tiivistesarja/ Pakningssæt/ Pakningssett/ Tätningssats

Ref.	**Model** Description	Qty.	**CP 1150** part no.
- ★	Set of seals	1	3363 0894 85

Parts marked with ★ will be subject to wear in the normal course of operations.
When ordering spare parts please do not forget to state the tool ident. no.

Note:
When a hammer box assembly is ordered, a loose CE nameplate is included in the consignment in accordance with European CE legislation. The weight stated on the adhesive nameplate refers to the weight of the hydraulic hammer plus hammer box (not including connector and tool).
After the hydraulic hammer and the hammer box have been assembled the CE nameplate should be attached to rear of the hammer box (see fig. 1 of the operating manual). Only then may the complete unit be used.

Tightening torques CP 1150

Ref. no.	**Designation**		**size . . NM**
1	Tensioning bolt	1" step	55 / 500 Nm
		2" step	60°
		3" step	120°
104	Hexagonal socket head screw		14 / 200 Nm
114	Hexagonal socket head screw		14 / 350 Nm
116/117	Male screw connection		46 / 160 Nm
119	Filling valve		22 / 130 Nm
	Screw plug		5 / 20 Nm
121	Connection screw		27 / 200 Nm
125	Nom-return valve		41 / 200 Nm
127	Lubricating nipple		14 / 20 Nm

Working tools

Pos	Part no	Description	for breaker	Total length mm	Working length mm	Weight kg
1	3363 0872 64	Moil point	CP 1150	1120	630	82,0
2	3363 0871 00	Flat chisel transverse	CP 1150	1120	630	85,0
3	3363 0872 65	Blunt steel	CP 1150	1120	630	85,0

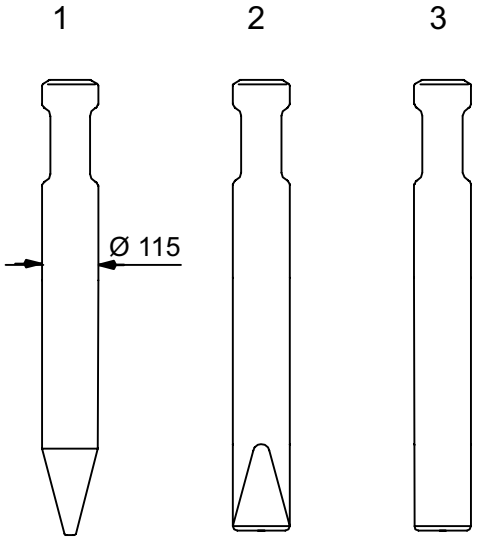

Use only authorized parts. Any damage or malfunction caused by the use of unauthorized parts is not covered by Warranty or Product Liability.

N'utiliser que des pièces approuvées. Tout endommagement ou fonctionnement défectueux résultant de l'utilisation de pièces non approuvées n'est pas couvert par Garantie et responsabilité du produit.

Nur zugelassene Teile verwenden. Schäden oder Funktionsstörungen, die auf die Verwendung nicht zugelassener Teile zurückzuführen sind, fallen nicht unter die Garantie- oder Produkthaftungsbestimmungen.

Sólo se pueden usar piezas autorizadas. Cualquier daño o funcionamiento defectuoso causado por el uso de piezas no autorizadas no se cubre por la Garantía o la Responsabilidad del Producto.

Use apenas peças autorizadas. Qualquer avaria ou mau funcionamento motivado pelo uso de peças não é coberto por garantia ou responsabilidade de riscos causados pelo produto.

Usare solamente parti autorizzate. I danni o disturbi del funzionamento causati dall'uso di parti non autorizzate, non sono coperti dalla Garanzia né dall'Assicurazione del prodotto.

Gebruik uitsluitend geautoriseerde onderdelen. Schade of gebreken veroorzaakt door het gebruik van niet-geautoriseerde onderdelen vallen niet onder de garantie of de produkt-aansprakelijkheid.

Χρησιμοποιείτε μόνο εγκεκριμένα εξαρτήματα. Τυχόν καταστροφή ή βλάβη η οποία προκαλείται από τη χρήση μη εγκεκριμένων εξαρτημάτων δεν καλύπτονται από τους κανονισμούς της εγγύησης ή της ευθύνης του κατασκευαστή.

Käytä vain hyväksyttyjä varaosia. Takuu ja tuotevastuu eivät korvaa hyväksymättömien varaosien käytöstä aiheutuvia vaurioita tai toimintahäiriöitä.

Brug kun autoriserede dele. Enhver skade eller fejlfunktion, der skyldes brugen af ikke-autoriserede dele, er ikke dækket af garantien eller produktansvarsforsikringen.

Bruk bare godkjente deler. Enhver skade eller funksjonsfeil som skyldes bruk av ikke godkjente deler dekkes ikke av garanti eller produktansvar.

Använd endast godkända reservdelar. Skada eller funktionsfel som beror på användning av ej godkända reservdelar täcks inte av garantiåtagande eller produktansvar.

Any unauthorized use or copying of the contents or any part thereof is prohibited. This applies in particular to trademarks, model denominations, part numbers and drawings.

Toute utilisation ou reproduction non autorisée du contenu, ou d'une partie du contenu, est illicite. Cela s'applique particulièrement aux marques déposées, aux désignations de modèles, aux numéros de pièces et aux plans.

Unbefugter Gebrauch oder das Kopieren des Inhalts, auch auszugsweise, ist verboten. Dies gilt besonders für Warenzeichen, Modellbezeichnungen, Teilnummern und Zeichnungen.

Está prohibido cualquier uso o copia no autorizada del contenido o de cualquier parte de éste. Esto se aplica en especial a marcas registradas, denominaciones de modelos, números de piezas y dibujos.

Qualquer utilização não autorizada ou cópia de qualquer peça é expressamente proibida. Isto alica-se em particular ás marcas registadas, denominação dos modelos, referência de peças e desenhos.

E' vitata qualsiasi forma d'uso o copiatura non autorizzata del contenuto, anche parziale, con particolare riguardo ai marchi di fabbrica, alle denominazioni dei modelli, ai numeri delle parti ed ai disegni.

Niet-geautoriseerd gebruik of kopiëren van de inhoud of een deel daarvan is niet toegestaan. Dat geldt in het bijzonder voor handelsmerken, model-benamingen, onderdeel nummers en tekeningen.

Απαγορεύεται η χρησιμοποίηση από αναρμόδιους καθώς και η αντιγραφή του περιεχομένου κειμένου ή τμήματος αυτού. Αυτό ισχύει ιδιαίτερα για τα κατατεθέντα σήματα, τις ονομασίες μοντέλων, τους αριθμούς εξαρτημάτων και τα σχέδια.

Sisällön tai sen osan luvaton käyttö tai kopiointi on kielletty. Tämä koskee erityisesti tavaramerkkejä, mallien nimiä, osanumeroita ja piirustuksia.

Enhver ikke-autoriseret brug eller kopiering af indholdet eller nogen del deraf er forbudt. Dette gælder især varemærker, modelbetegnelser, reservedelsnumre og tegninger.

Enhver ikke godkjent bruk eller kopiering av innholdet eller noen del av det er forbudt. Dette gjelder i særlig grad varemerker, modellbetegnelser, delnummer og tegninger.

Ej i förväg godkänd användning eller kopiering av innehållet eller del av detta är förbjuden. Detta gäller speciellt varumärken, modellbeteckningar, reservdelsnummer och ritningar.

Notes:

Notes: