Chicago Pneumatic

Spare parts list

Hydraulic compactor 409

	Valid from serial number
RC 409	BGF0000001

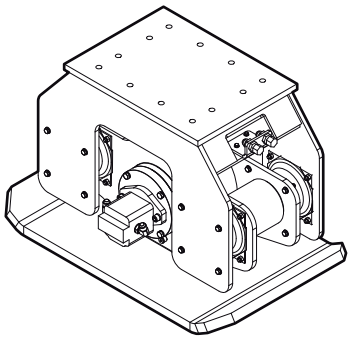

Contents

General information 5

Spare parts list 6
Hydraulic compactor 6

Tightening torques 8

Accessories 9
Hydraulic hoses 9
Optional equipment 9

Kits 10
Label kit 10
Seal kit (Hydraulic motor) 10
Rubber isolator kit 10

Dimensions 11

General information

This spare parts list applies to the following:

Part number	Description
1826 1017 54	Hydraulic compactor RC 409

Use only authorized parts. Any damage or malfunction caused by the use of unauthorized parts is not covered by Warranty or Product Liability.
Any unauthorized use or copying of the contents or any part thereof is prohibited. This applies in particular to trademarks, model denominations, part numbers, and drawings.

Instructions for use
This spare parts list contains no safety regulations and is merely intended to assist in the ordering of spare parts.
For information about operating, servicing, or repairing, the relevant Safety and operating instructions must be consulted at all costs.
Please observe the safety instructions listed in the relevant Safety and operating instructions!

Instructions of ordering
It is essential to indicate the serial number of the hydraulic attachment when ordering spare parts!
Determine the quantity of individual parts which are required and need to be ordered.
The order must indicate the following details:

- full identification code of the hydraulic attachment
- required quantity
- part number
- description

Spare parts list

Hydraulic compactor

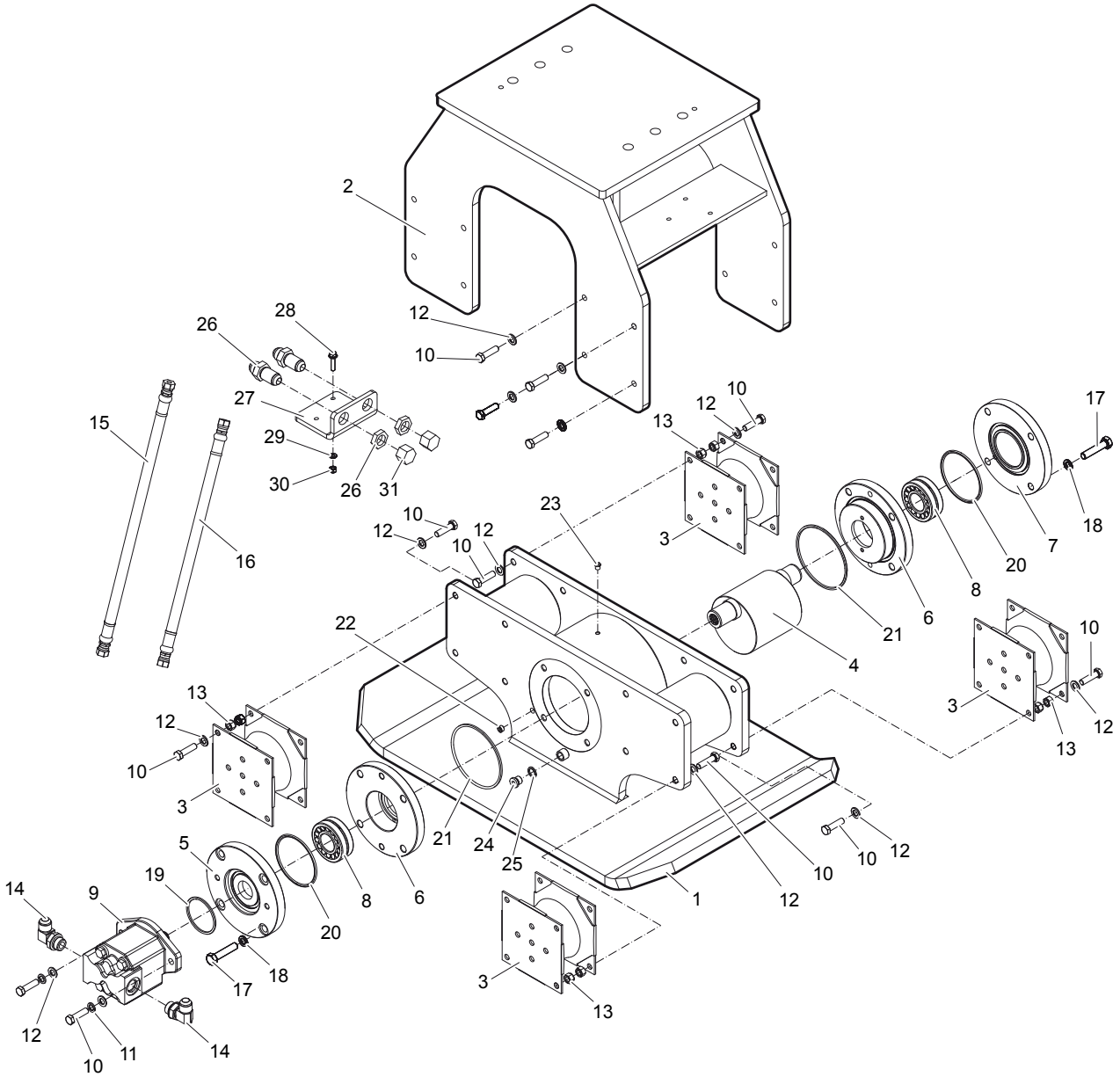

No.	Description	Remark	Quantity	Part number
1	Rotor housing incl. tamper plate		1	3376 6972 03
2	Outer housing		1	3376 6972 06
3	Rubber isolator		4	3376 1007 55
4	Rotor		1	3376 6910 04
5	Bearing cover		1	3376 6960 11
6	Bearing retainer		2	3376 6960 12
7	Bearing cover		1	3376 6960 13
8	Bearing		2	3376 1007 56
9	Hydraulic motor		1	3376 1007 58
10	Hexagon head bolt		34	3376 1005 98
11	Washer		2	3376 1006 24
12	Washer		34	3371 8067 05
13	Nut		32	3371 8167 02
14	Elbow joint		2	3376 1007 35
15	Hydraulic hose		1	3376 1014 86
16	Hydraulic hose		1	3376 1015 19
17	Hexagon head bolt		8	3376 1007 57
18	Washer		8	3376 1007 71
19	O-ring		1	3371 8067 10
20	O-ring		2	3376 1000 60
21	O-ring		2	3376 1000 74
22	Oil level indicating plug		1	3371 8131 41
23	Air breather valve		1	3376 1007 79
24	Drain plug		1	3371 8037 07
25	Seal ring		1	3377 0163 75
26	Fitting		2	3376 1008 36
27	Plate		1	3376 6980 36
28	Hexagon head bolt		3	4700 9021 47
29	Washer		3	3377 0005 03
30	Nut		3	3377 1110 08
31	Cap		2	3376 1007 32

Tightening torques

No.	Description	Tightening torque	Remark
10	Hexagon head bolt	93 Nm	Open-ended wrench size 19
17	Hexagon head bolt	148 Nm	Open-ended wrench size 22
23	Air breather valve	pretighten finger tight, then 1 - 2 turns tighten with the open-ended wrench	Open-ended wrench size 15
22	Oil level indicating plug	pretighten finger tight, then 1 - 2 turns tighten with the Allen key	Allen key size 7
24	Drain plug	30.5 Nm	Allen key size 8
28	Hexagon head bolt	25 Nm	Open-ended wrench size 13

Accessories

Hydraulic hoses

Description	Remark	Quantity	Part number
Hydraulic hose	I.D. 20 (0.79"), both ends M 36 x 2 conical seal 24º, length 2300 mm (91 in.)	2	3360 3322 94
Hydraulic hose	I.D. 20 (0.79"), both ends M 36 x 2 conical seal 24º, length 2800 mm (110 in.)	2	3363 0859 47

Note

You need a special fitting set when using these hose connections. The fitting set must be ordered separately.

Accessories to the hydraulic hoses

Description	Remark	Quantity	Part number
Fitting set		1	3363 0982 87

Note

Remove the genuine fittings carrier side from the valve block before mounting the fitting set.

Optional equipment

Description	Remark	Quantity	Part number
Control valve block		1	3376 6970 07
Adapter plate matching the carrier	Consult the Chicago Pneumatic Customer Center/Dealer in your area.	1	-
Base plate with through borings		1	3363 0997 01
Bolt kit		1	3363 1065 08
Open end spanner	24/27 mm for bolt kit	1	3360 4306 55

Kits

Label kit

No.	Description	Remark	Quantity	Part number
	Label kit		1	3376 6971 31

Seal kit (Hydraulic motor)

No.	Description	Remark	Quantity	Part number
	Seal kit		1	3376 6910 36

Rubber isolator kit

No.	Description	Remark	Quantity	Part number
	Rubber isolator kit		1	3376 6910 32

Dimensions

mm (inch)

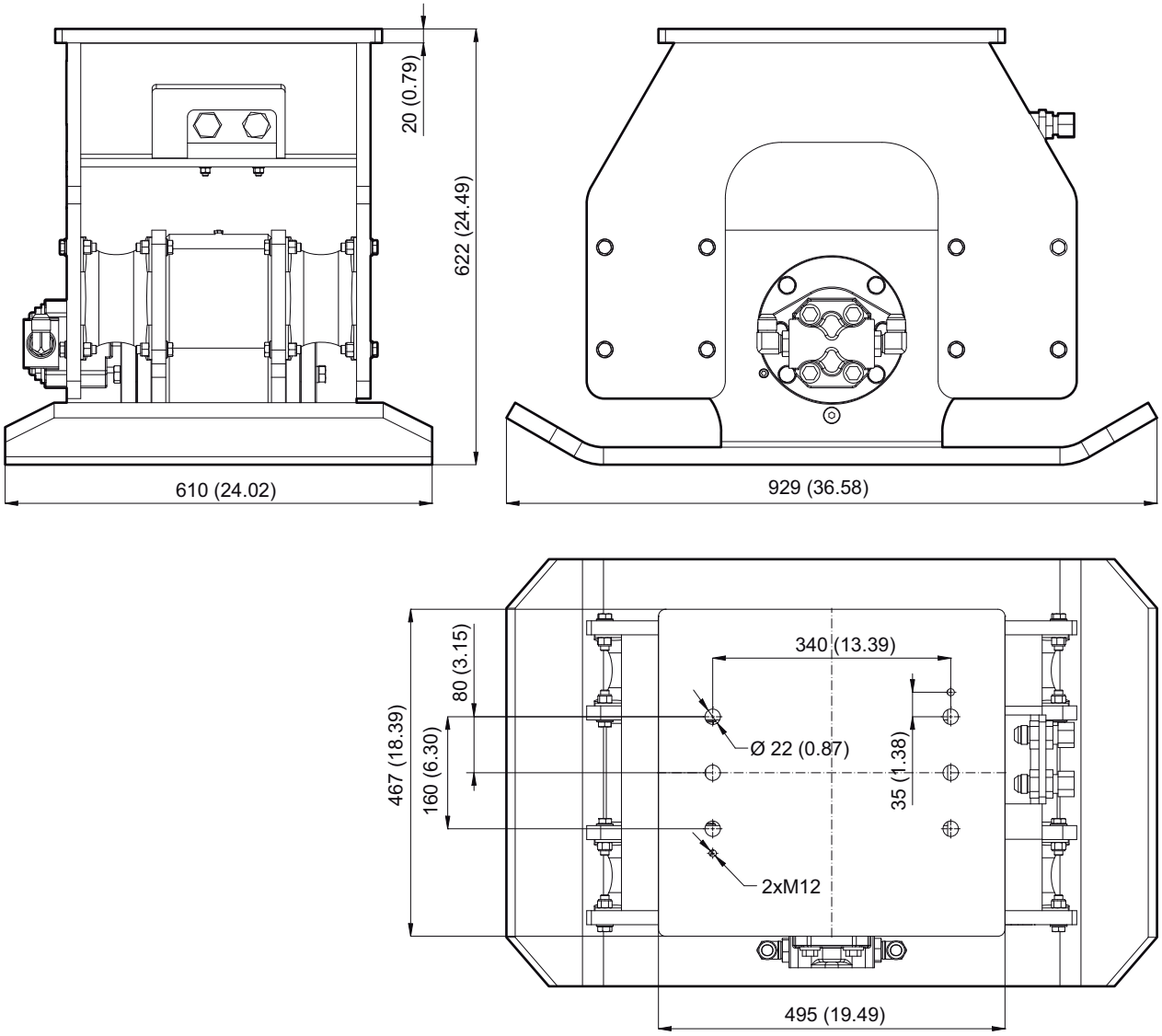

Chicago Pneumatic

2012-01-23 | No. 3390 7595 01
© Copyright Atlas Copco Construction Tools GmbH | ESSEN • GERMANY